InformaCast Enabled Ceiling Speaker

CyberData
The IP Endpoint Company

The CyberData InformaCast Enabled Ceiling Speaker is an economical Power-over-Ethernet (PoE 802.3af) and Voice-over-IP (VoIP) public address product that plays InformaCast and multicast messages. It easily connects to your PoE network with a single Ethernet cable connection. The device's small footprint allows the speaker to be discreetly mounted in your ceilings.

Features

- Capable of receiving Singlewire InformaCast and multicast messages
- Supports Singlewire InformaCast High Quality Audio
- Supports audio prioritization for 10 multicast paging groups
- Can receive pages directly from Poly phones as well as other devices that can send standard multicast
- Supports delayed pages with buffered multicast

- Network-adjustable speaker volume
- High efficiency speaker driver
- Small footprint

- TLS security for autoprovisioning and web-based configuration
- 802.11q VLAN tagging
- Configurable event generation for device health and status monitoring
- User upgradeable firmware via web interface or autoprovisioning

Specifications	
Ethernet I/F	10/100 Mbps
Protocol	RTP
Notification Software	Singlewire InformaCast v4.0 and above
Power Input	PoE 802.3af
Audio Output	802.3af – SPL 99 dB @ 1 meter
Payload Types	G.711 a-law, G.711µ-law, G.722 and G.729
Network Security	TLS/SSL 1.2
Operating Range	Temperature: -40° C to 55° C (-40° F to 131° F) Humidity: 5-95%, non-condensing
Storage Temperature Storage Altitude	-40° C to 70° C (-40° F to 158° F) Up to 15,000 ft. (4573 m)
Dimensions*	7.93 in. [201.5 mm] Grill Diameter 6.70 in. [170 mm] Can Diameter 3.52 in. [89.4 mm] Can Depth
Weight Boxed Weight	2.4 lbs [1.09 kg] 2.9 lbs [1.32 kg]
Compliance	CE; EMC Directive – Class A EN 55032 & EN 55024, LV Safety Directive – EN 60950-1, RoHS Compliant, FCC; Part 15 Class A, Industry Canada; ICES-3 Class A, IEEE 802.3 Compliant
Warranty	5 Years Limited
Part Number	011504

*Dimensions are measured from the perspective of the product being upright with the front of the product facing you.

Related Products:

011505 InformaCast Enabled Wall Mount Speaker

011446 Multicast VoIP Microphone

011146 SIP Paging Server with Bell Scheduler

InformaCast Enabled Ceiling Speaker

Typical IP Speaker Configuration

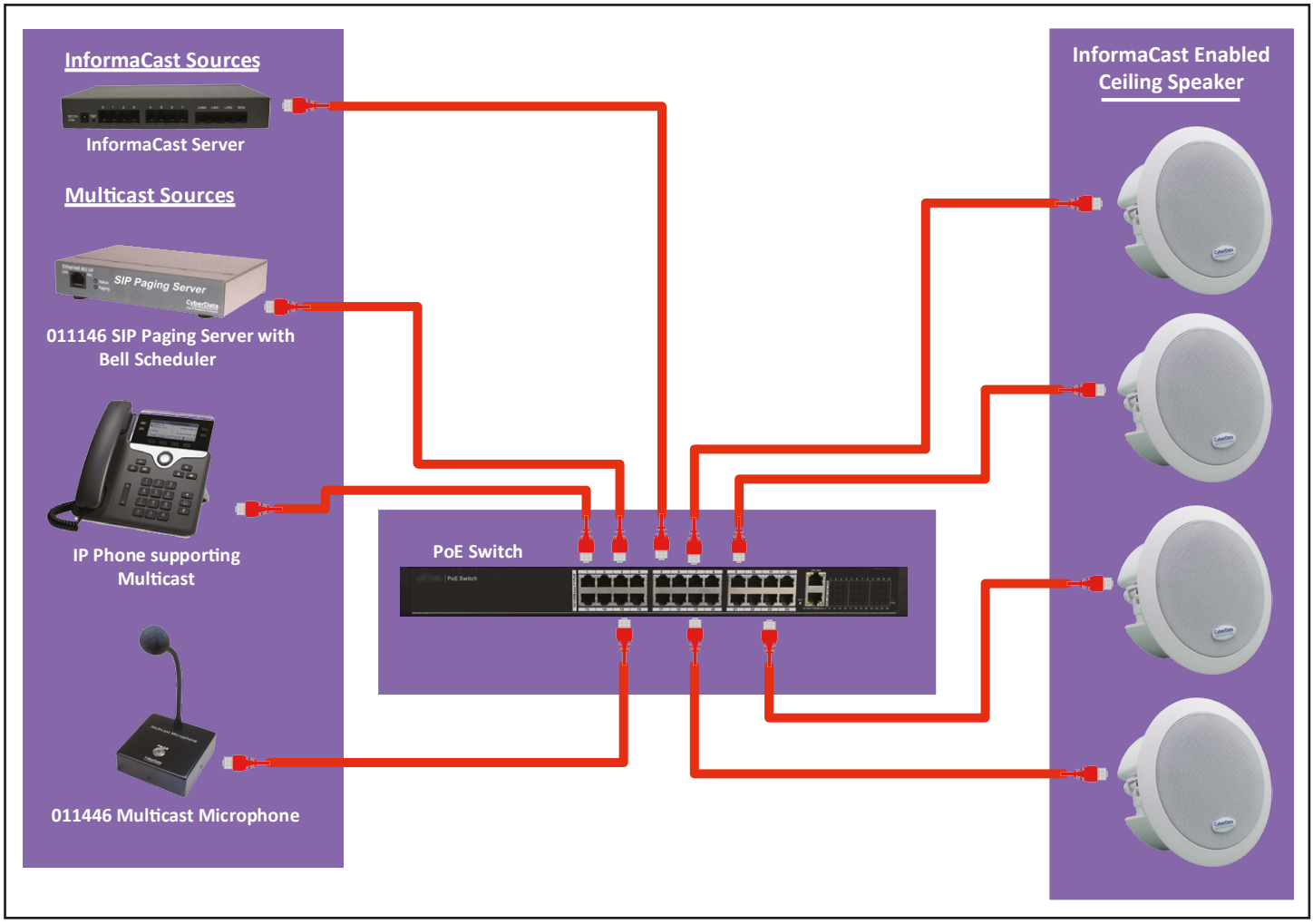
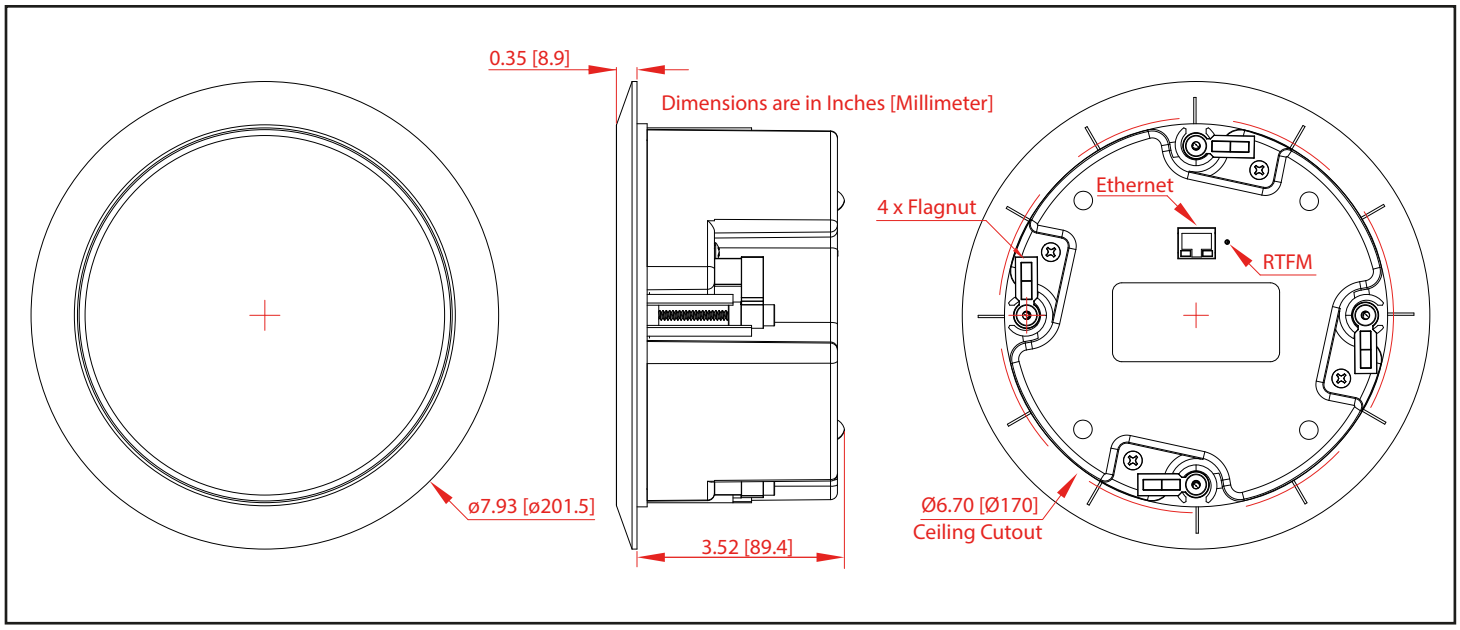
Dimensions