Analog Ceiling Speaker 25V/70V/8 Ohm

CyberData
The IP Endpoint Company

When paired with the new CyberData SIP Paging 25V/70V +4 Amplifier, the Analog Ceiling Speakers 25V/70V/8 Ohm offer a cost-effective solution that significantly extends the sound coverage area.

The Speaker offers the option of constant voltage at either 25 or 70 volts as well as a traditional 8 Ohm setting. Each Speaker is configured with 5 power tap settings.

Easy to install, multiple speakers can tee off a single home run cable to the SIP Paging 25V/70V +4 Amplifier.

Features

- Supports 25V, 70V or traditional 8 Ohm power input
- Multiple power tap settings for desired dB output
- Designed for good speech intelligibility
- Suitable for background music

- High efficiency speaker driver
- Easy installation
- Seismic tether bracket for additional stability

Specifications				
Modes	8 Ohm, 25V, 70V			
Direct Impedance	8 Ohms			
Power Handling	20 watts continuous duty			
Power Input	25V, 70V or 8 Ohm			
Audio Output*				
Power Taps	1.25W	3.75W	10W	30W
25V	88.6	93.1	96.8	100.7
70V	89.3	93.7	97.4	101.9
Frequency Response	100 to 20000 Hz			
Operating Range	Temperature: -40°C to 55 °C (-40 °F to 131F°) Humidity: 5-95%, non-condensing			
Storage Temperature Storage Altitude	-40° C to 70° C (-40° F to 158°F) Up to 15,000 ft. (4573 m)			
Dimensions**	9.93 in [252.2 mm] Grill Diameter 8.66 in [220 mm] Can Diameter 5.74 in [145.7 mm] Can Depth			
Boxed Weight Weight	4.6 lbs [2.09 kg] 5.6 lbs [2.54 kg]			
Warranty	5 Years Limited			
Part Number	011588			

* dBc output measured @1M and 1 kHz
**Dimensions are measured from the perspective of the product being upright with the front of the product facing you.

Related Products

011598 SIP Paging 25V/70V +4 Amplifier
011599 InformaCast Enabled Paging 25V/70V +4 Amplifier

Analog Ceiling Speaker 25V/70V/8 Ohm

Typical Analog Installation

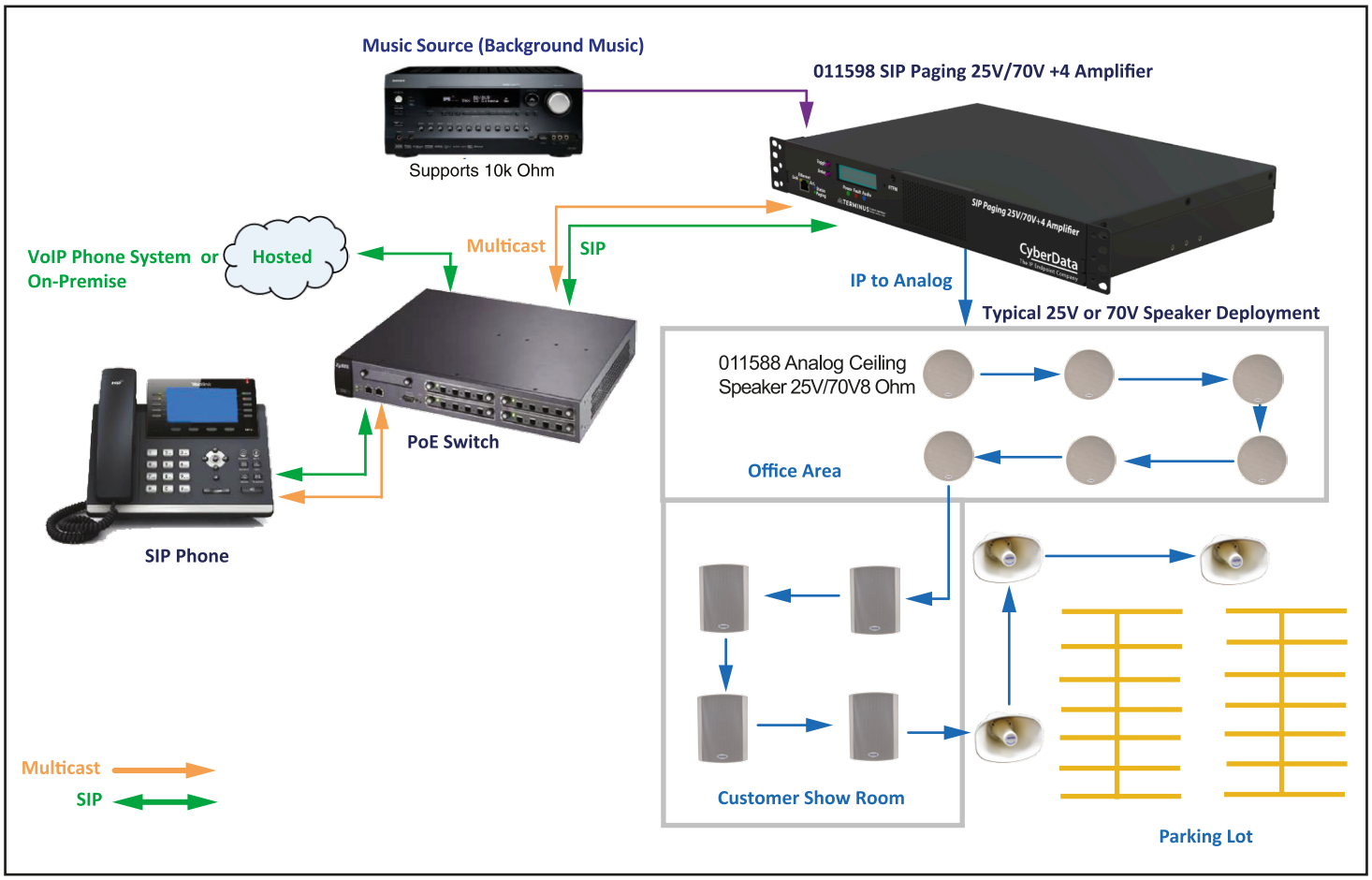

Analog Ceiling Speaker db Output Levels*

Power Tap Settings

Voltage	1.25W	3.75W	10W	30W
25V	88.6	93.1	96.8	100.7
70V	89.3	93.7	97.4	101.9

* dBC @1M and 1kHz

Speaker Matrix Example

Note: Configuration aspictured above

	Qty	Power Tap	Total
Ceiling Speakers	6	3.75W	22.5W
Wallmount	4	10W	40W
Horns	3	15W	45W
			107.5W

Audio Output Selector Switch

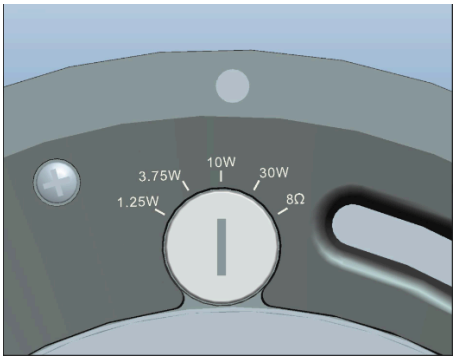

Power Input Selector Switch

Analog Ceiling Speaker 25V/70V/8 Ohm
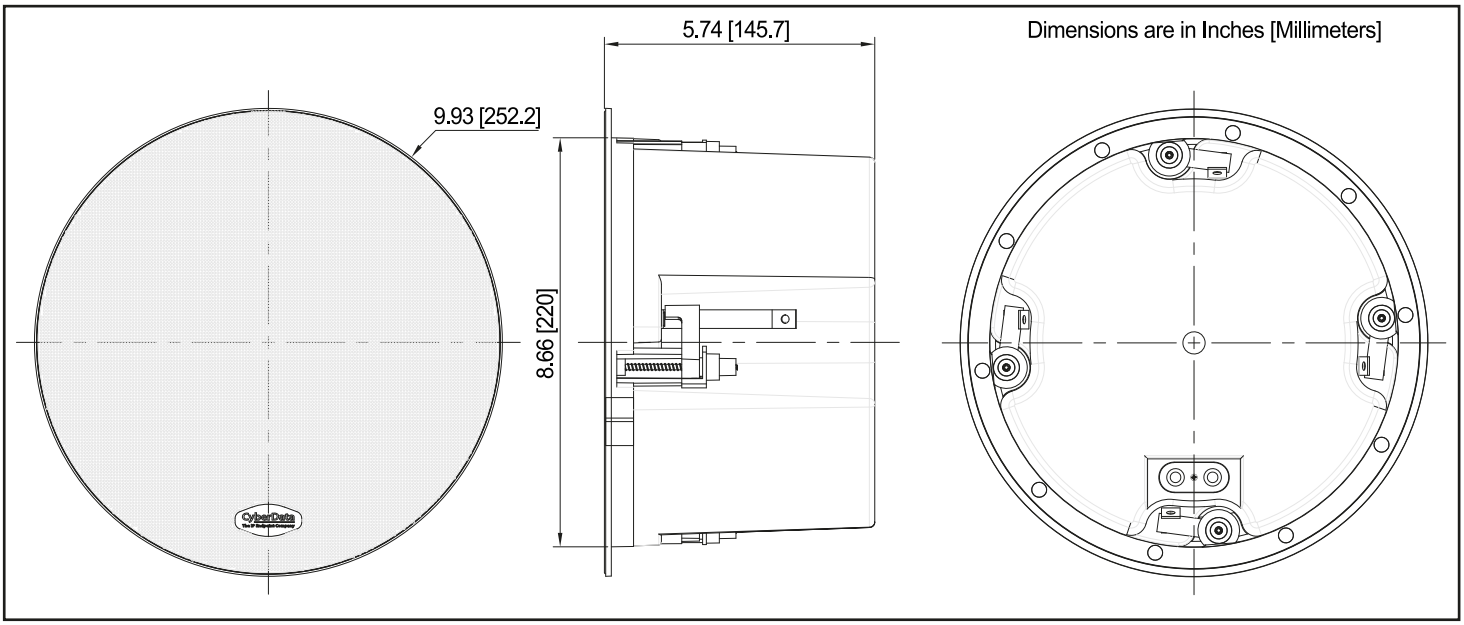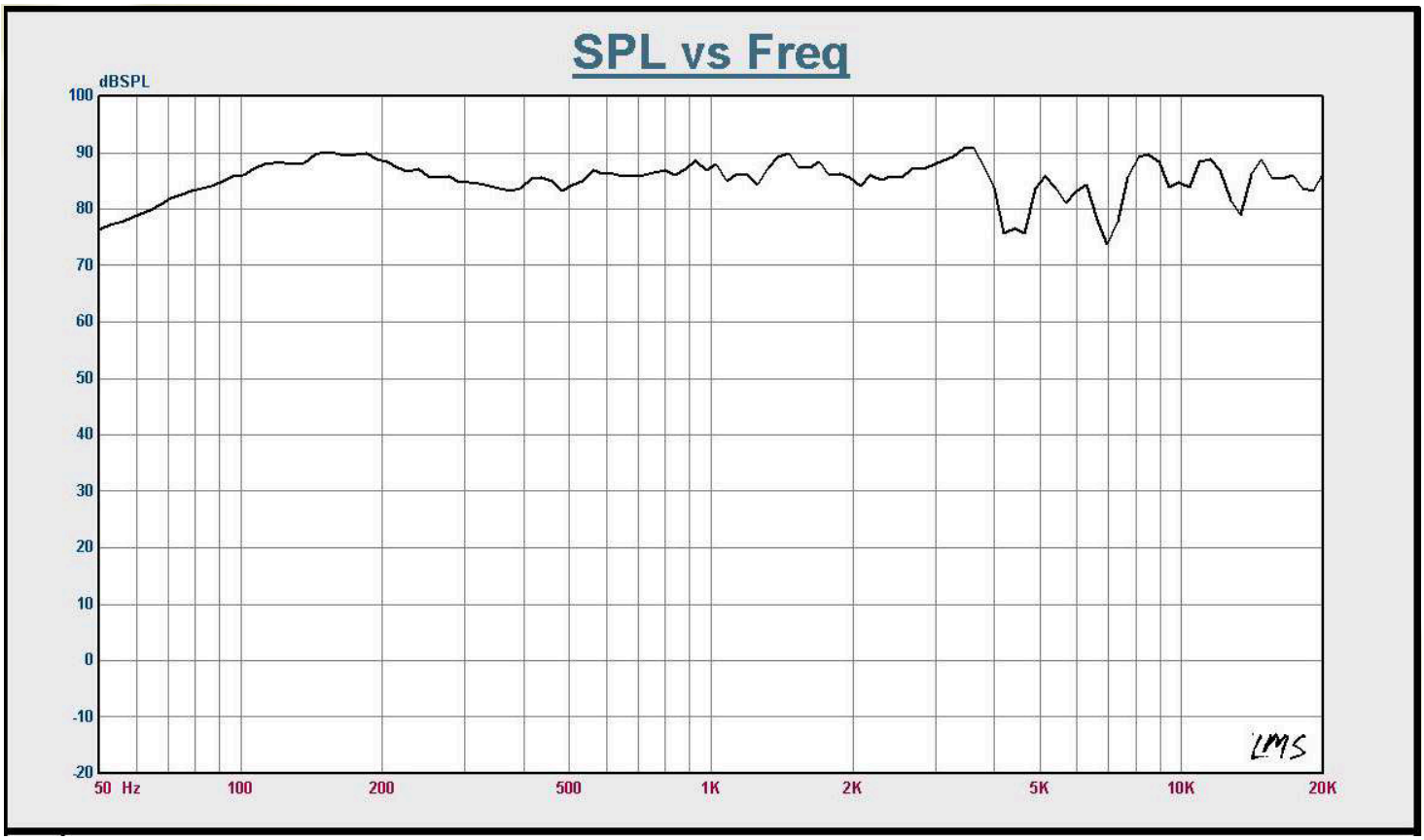
Dimensions